ENGLISH

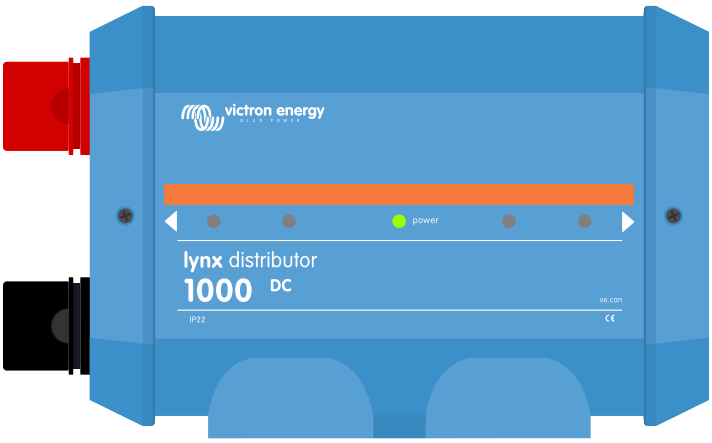

Lynx Distributor M10

rev 05 - 10/2026

Table of Contents

1. Safety Precautions **1**
1.1. Safety Warnings Lynx Distribution System 1
1.2. Transport and Storage 1

2. Introduction **2**
2.1. The Lynx Distributor 2
2.2. Manuals for discontinued Lynx products 3
2.3. VictronConnect App 4
2.4. GX device 4
2.5. The Lynx Distribution System 5

3. Features **6**
3.1. Internal parts and wiring diagram Lynx Distributor 6
3.2. Fuse detection 7
3.3. The RJ10 cable 7

4. Communication and interfacing **8**
4.1. Lynx Distributor fuse monitoring 8
4.2. The VictronConnect App 8
4.3. GX Device 8

5. System Design **9**
5.1. Lynx distribution system parts 9
5.1.1. Orientation of Lynx modules 10
5.1.2. Interconnecting Lynx modules 12
5.1.3. System example - Lynx Distributor only 12
5.1.4. System Example - Lynx Power In only 13
5.1.5. System Example - Lynx Class-T Power In and Lynx Distributor 14
5.1.6. System example - Lynx Shunt VE.Can, Lynx Power In, Lynx Distributor and lead acid batteries 15
5.1.7. System example - Lynx Smart BMS, 1x Lynx Distributor and lithium batteries 15
5.1.8. System example - Lynx Smart BMS, 2x Lynx Distributor and lithium batteries 16
5.2. System sizing 17
5.2.1. Current rating Lynx modules 17
5.2.2. Fusing 17
5.2.3. Cabling 17

6. Installation **18**
6.1. Mechanical connections 18
6.1.1. Lynx module connection features 18
6.1.2. Mounting and interconnecting Lynx modules 18
6.1.3. Addressing Lynx Distributor 19
6.2. Electrical connections 19
6.2.1. Connect RJ10 cable(s) 20
6.2.2. Connect DC wires 20
6.2.3. Ground and Negative connections 21
6.2.4. Place Lynx Distributor fuses 22
6.2.5. Positive connections 23
6.3. Configuration and settings 24
6.3.1. Settings Lynx Distributor 24

7. Commissioning the Lynx Distributor **25**

8. Operation Lynx Distributor **26**
8.1. Monitoring Lynx Distributor 27

9. Troubleshooting and Support **30**
9.1. Cabling issues 30
9.2. Fuse issues 30
9.3. Lynx Distributor operational issues 31

10. Technical specifications Lynx Distributor 32

11. Enclosure dimensions Lynx Distributor M8 and M10 33

1. Safety Precautions

1.1. Safety Warnings Lynx Distribution System

- Do not work on live busbars. Ensure that the busbar is unpowered by disconnecting all positive battery poles prior to removing the Lynx front cover.
- Work on batteries should be carried out by qualified personnel only. Observe the battery safety warnings as listed in the battery manual.

1.2. Transport and Storage

Store this product in a dry environment.

The storage temperature should be: -40°C to +65°C.

No liability can be accepted for damage in transit if the equipment is not transported in its original packaging.

2. Introduction

2.1. The Lynx Distributor

The Lynx Distributor contains a positive and a negative busbar. The positive busbar has four fuse-protected connections with fuse monitoring. The negative busbar has four connections and a ground connection. It is part of the Lynx Distribution system and is available with M10 busbar. Note that M10 refers to the busbar connection joints where the modules are connected to each other. The fuse and cable connections are always M8.

The Lynx Distributor has a power LED and four fuse status indication LEDs.

If connected to a Lynx Smart BMS, up to 4 Lynx Distributors can send fuse status information to the Lynx Smart BMS. This feature is not available when connected to a Lynx Shunt VE.Can.

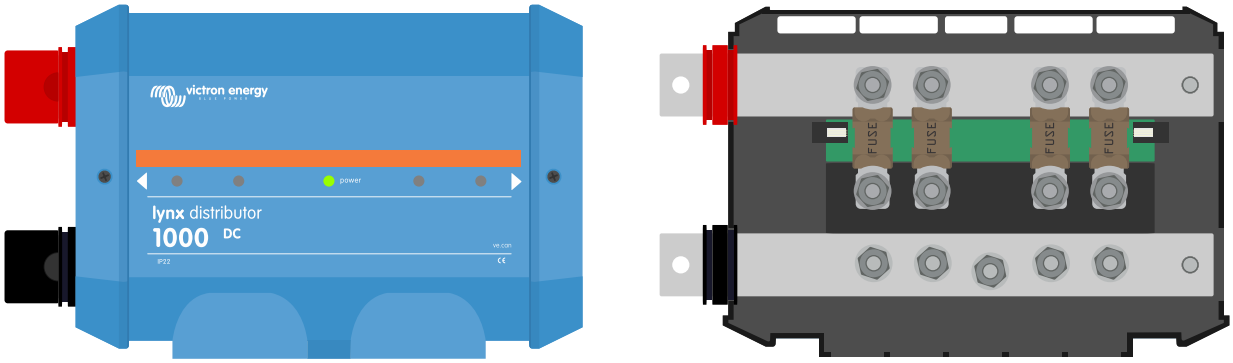

The Lynx Distributor - with and without cover

The Lynx Distributor ships together with a 40cm RJ10 cable. This cable provides power to the Lynx Distributor and is also used to transmit data if connected to a Lynx Smart BMS.

The RJ10 cable

The Lynx Distributor is designed to hold MEGA fuses. These need to be purchased separately.

For more information, see the Fuses & fuse holders product page.

A selection of MEGA fuses with a variety of current ratings

2.2. Manuals for discontinued Lynx products

The following products are no longer in production and are no longer described in this manual:

- Lynx Shunt VE.Can (M8)
- Lynx Smart BMS 500 (M8)
- Lynx Distributor (M8)
- Lynx Power In (M8)

Their manuals remain available in the old manuals section of the Victron Energy website: https://www.victronenergy.com/old_manuals

These manuals are no longer updated. Discontinued products continue to work as described in them and can still be used in existing installations.

2.3. VictronConnect App

If the Lynx Distributor is connected to a Lynx Smart BMS, it can be monitored and set up with the VictronConnect App.

For more information, see the VictronConnect App download page and the VictronConnect manual.

2.4. GX device

Up to 4 connected Lynx Distributors can be monitored with a GX device if connected to a Lynx Smart BMS.

For more information on the GX device, see the GX device product page.

The GX device can be connected to the VRM portal, allowing remote monitoring.

For more information on the VRM portal, see the VRM page.

2.5. The Lynx Distribution System

The Lynx Distribution System is a modular busbar system that incorporates DC connections, distribution, fusing, battery monitoring and/or Lithium battery management. For more information, see the DC Distribution Systems product page.

The Lynx Distribution System consist of the following parts:

- **Lynx Power In** - A positive and negative busbar with four batteries or DC equipment connections, available with M10 busbar.
- **Lynx Class-T Power In** - A positive and negative busbar that accepts two Class-T fuses and has two battery or DC equipment connections, available with M10 busbar.
- **Lynx Distributor** - A positive and negative busbar with four fused connections for batteries or DC equipment and fuse monitoring, available in two versions, available with M10 busbar.
- **Lynx Shunt VE.Can** - A positive busbar with a space for a main system fuse and a negative busbar with a shunt for battery monitoring. It has VE.Can communication for monitoring and setup with a GX device. Available iwith M10 busbars.
- **Lynx Smart BMS** - For use together with Victron Energy Smart Lithium batteries. It contains a positive busbar with a contactor driven by a battery management system (BMS) and a negative busbar with a shunt for battery monitoring. It has Bluetooth communication for monitoring and setup via the VictronConnect App and VE.Can communication for monitoring with a GX device and the VRM portal. Available as a 500A model with M10 busbars or 1000A model with M10 busbars.

The Lynx modules: Lynx Power In, Lynx Class-T Power In, Lynx Distributor, Lynx Shunt VE.Can and Lynx Smart BMS

3. Features

3.1. Internal parts and wiring diagram Lynx Distributor

The internal physical parts and the wiring diagram of the Lynx Distributor indicating the following parts:

- Positive busbar
- Negative busbar
- Fuses
- Positive connections
- Negative connections
- Ground connection

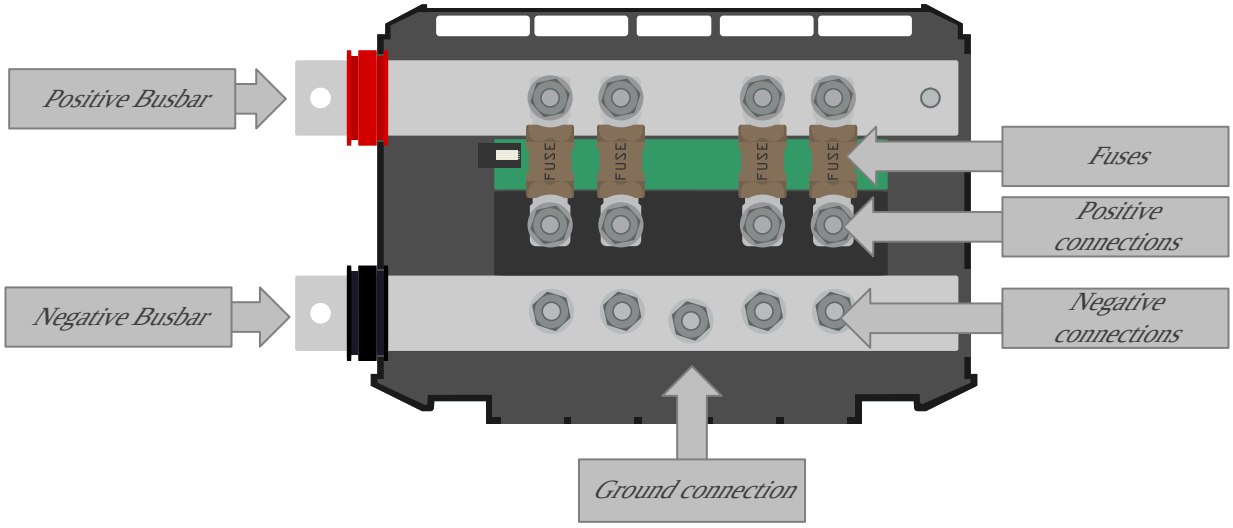

The Internal physical parts of the Lynx Distributor

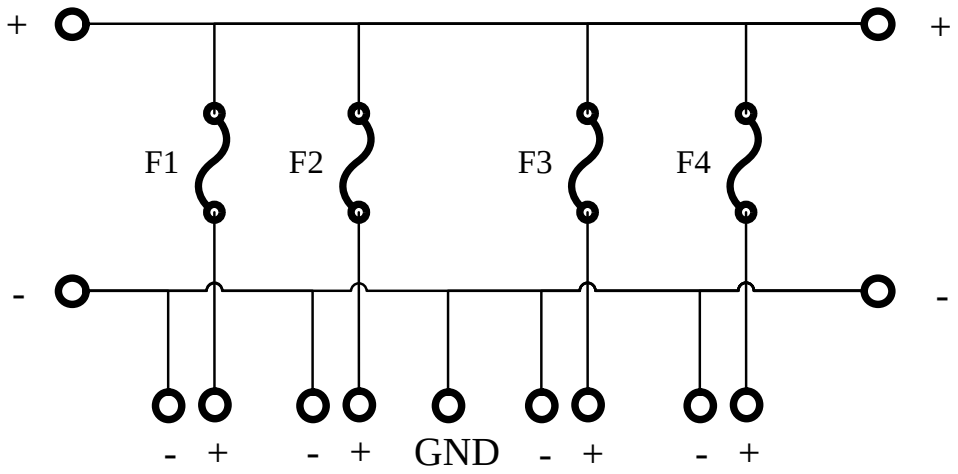

The internal wiring diagram of the Lynx Distributor

3.2. Fuse detection

The Lynx Distributor monitors each fuse and will detect a blown fuse.

When a fuse blows, the red fuse LED will illuminate, the power LED will turn red, and an alarm message is sent to a connected Lynx Smart BMS.

Fuse detection is possible from all fuses on the battery side or the load or charger side. Be aware that the fuse detection has a particularity; when batteries are connected to multiple Lynx Distributor circuits and if one of the battery fuses blows, the fuse monitor will not measure a high enough voltage over the fuse to trigger a broken fuse alarm until the battery is being charged or discharged.

> The fuse monitors in Lynx Distributor modules with older firmware (before serial number HQ1909) cannot detect a blown fuse when batteries are connected. It can only detect a blown fuse if loads are connected.

3.3. The RJ10 cable

The RJ10 cable supplies power to the Lynx Distributor from a Lynx Smart BMS or Lynx Shunt VE.Can and transfers data between the Lynx Distributor and the Lynx Smart BMS.

The Lynx Distributor does not have an in-built power supply to supply its fuse detection circuit; it relies on this power to be supplied from a Lynx Shunt VE.Can or a Lynx Smart BMS via the RJ10 cable. If the Lynx Distributor is used without a Lynx Shunt VE.Can or a Lynx Smart BMS, it needs to be powered in an alternative way so that the fuse detection circuit is operational.

To power the RJ10 cable for standalone use, do the following:

- Connect pin 1 of the RJ10 connector to 5V (4.5V-5.5V).
- Connect pin 4 to GND.

> The RJ10 connection is not protected against reverse polarity. A wrong RJ10 connection can irreversibly damage the Lynx Distributor's electronic circuits.

Figure 1. Pinout RJ10 connector

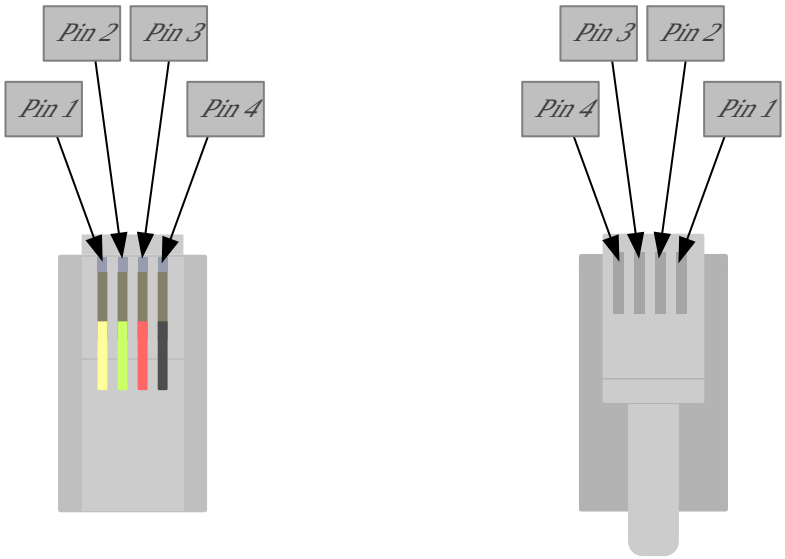

RJ10 connector contact side RJ10 connector - retainer clip side

The Lynx Distributor communicates the operational status and the status of each fuse via the RJ10 cable to a Lynx Smart BMS. The data can then be accessed via the VictronConnect App, GX device and the VRM portal.

> The communication feature has been implemented in the Lynx Distributor from serial number HQ1909 or above.

> Communication is not possible in combination with the Lynx Shunt VE.Can.

4. Communication and interfacing

4.1. Lynx Distributor fuse monitoring

Up to 4 Lynx Distributors can be connected to a Lynx Smart BMS. They communicate via the RJ10 cable. The Lynx Distributors communicate fuse and operational status to the Lynx Smart BMS. The Lynx Smart BMS can be used to read out the Lynx Distributors and generate alarms in case a fuse is blown or communication is lost.

For this functionality, the Lynx Distributor must have serial number HQ1909 or later. Earlier produced Lynx Distributors do not communicate fuse status.

4.2. The VictronConnect App

The VictronConnect App communicates via Bluetooth. It is used for changing settings, monitoring the Lynx Smart BMS and up to 4 connected Lynx Distributors. For more information on the VictronConnect App see the VictronConnect manual.

4.3. GX Device

Ensure that the VE.Can & Lynx Ion BMS (250 kbit/s) profile is selected on the GX device in Settings → Connectivity. This is the default profile for VE.Can communication. Note that the BMS-Can port cannot be used for this connection.

If the Lynx Distributor is connected to a Lynx Smart BMS and the Lynx Smart BMS is connected to a GX device via VE.Can, the GX device show Lynx Distributor operational data and the status of each fuse. If the GX device is connected to the internet, the Lynx Distributor can also be monitored remotely via the VRM portal.

5. System Design

5.1. Lynx distribution system parts

A Lynx distribution system usually consists of a single Lynx Smart BMS or Lynx Shunt VE.Can module together with a Lynx Class-T Power, Lynx Power In or Lynx Distributor.

The choice between a Lynx Shunt VE.Can or a Lynx Smart BMS depends on what type of batteries are used in the system. The Lynx Smart BMS can only be used with the Victron Energy Lithium Smart Batteries or in its NG version with Victron Energy Lithium NG Batteries, while the Lynx Shunt VE.Can is suitable for all other batteries.

Then, single, multiple or a combination of Lynx Distributor modules and/or Lynx Power In/Lynx Class-T Power In modules are added.

Together they form a continuous negative and positive busbar with DC connections and, depending on the configuration, integrated fuses, a battery monitor and/or lithium battery management.

It is also possible to use Lynx Power In modules, Lynx Class-T Power in and/or Lynx Distributor modules without a Lynx Smart BMS module or a Lynx Shunt VE.Can module. This is for situations where battery monitoring or battery management is not needed.

5.1.1. Orientation of Lynx modules

If the Lynx System contains a Lynx Shunt VE.Can or Lynx Smart BMS, the batteries always have to be connected to the left side of the Lynx System and the rest of the DC system (loads and chargers) connect to the right side. This so the battery state of charge can be correctly calculated.

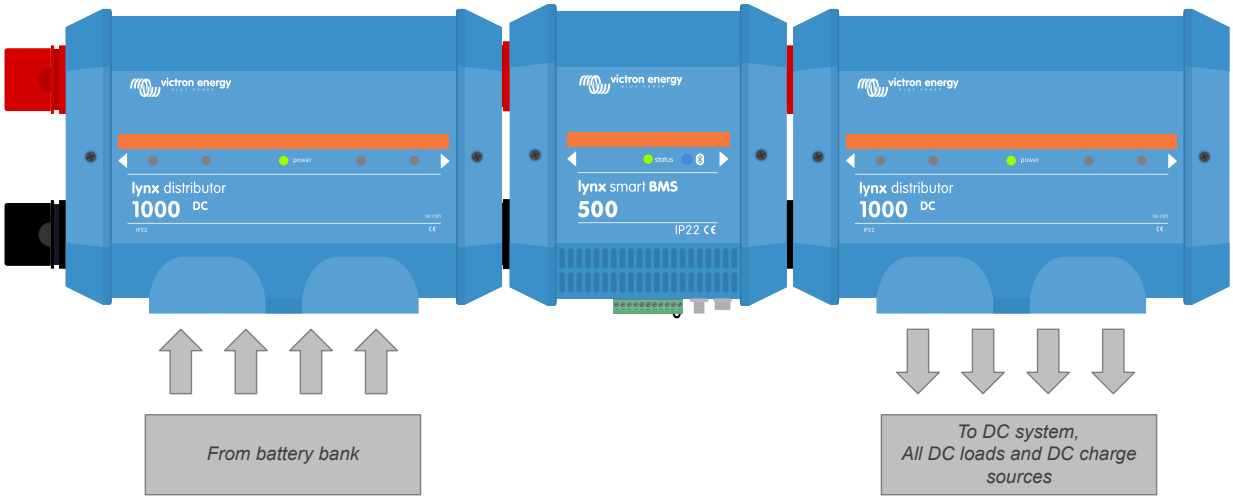

Example of Lynx module orientation: the batteries connect to the left side and all loads and chargers connect on the right side

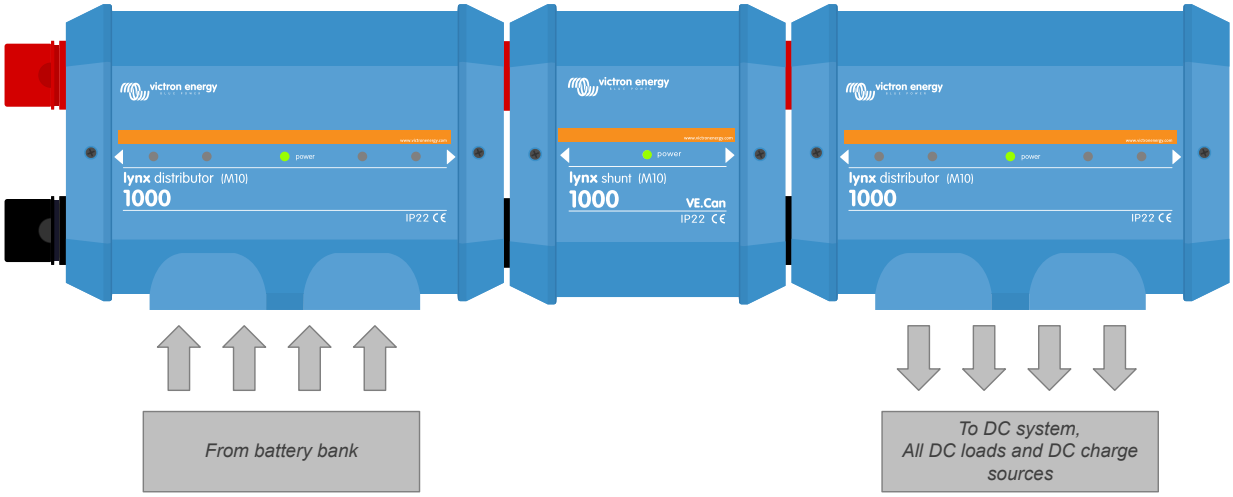

Example of Lynx module orientation: the batteries connect to the left side and all loads and chargers connect on the right side

The Lynx modules can be mounted in any orientation. Should they be mounted upside down so that the text on the front of the units is upside down as well, use the special stickers included with each Lynx module so that the text is orientated the correct way.

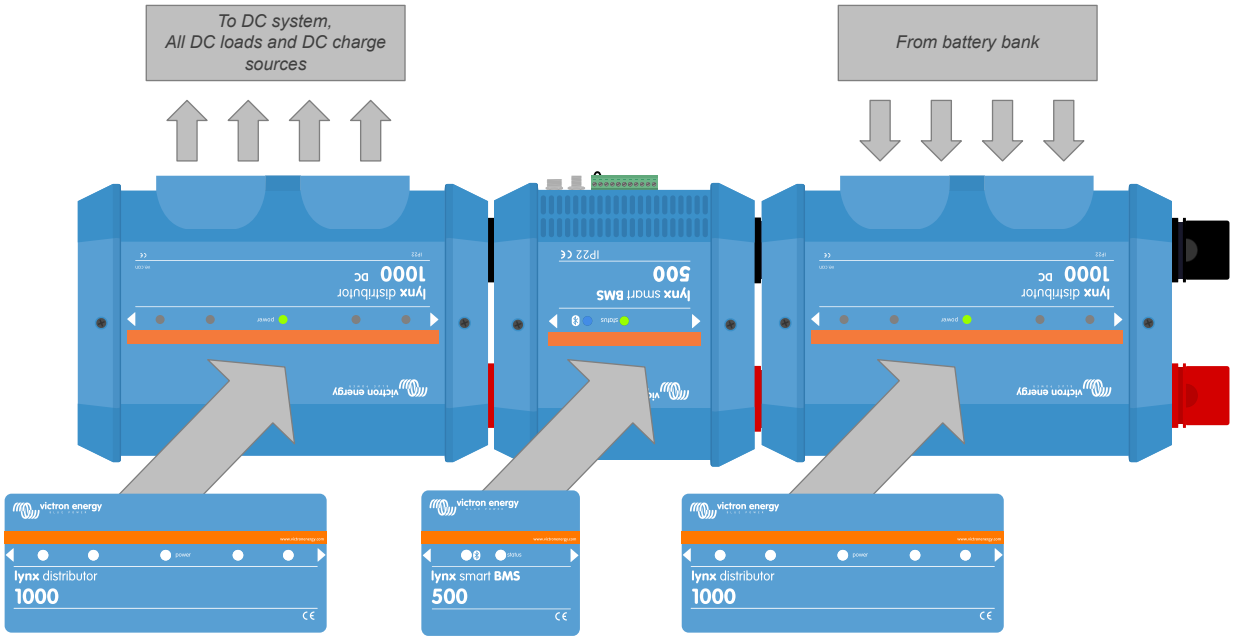

Example of Lynx modules mounted upside down: the batteries connect to the right side, all loads and chargers connect to the left side and the upside-down stickers are affixed.

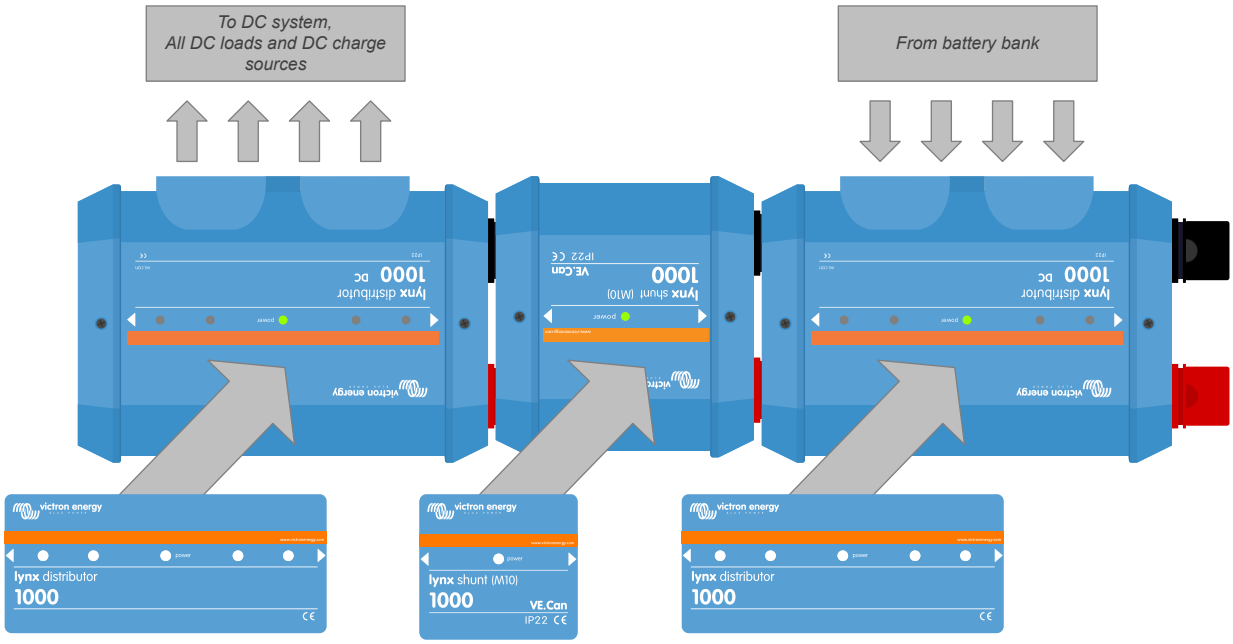

Example of Lynx modules mounted upside down: the batteries connect to the right side, all loads and chargers connect to the left side and the upside-down stickers are affixed.

5.1.2. Interconnecting Lynx modules

Each Lynx module can be connected to other Lynx modules on the left and right. Note that M10 modules cannot be connected directly to M8 modules and vice versa.

If the Lynx module is the first in line, the last in line or is used by itself, it is possible to connect batteries, loads or chargers directly to these connections. Please note that additional fusing may be required if batteries and loads are connected directly to the interconnections.

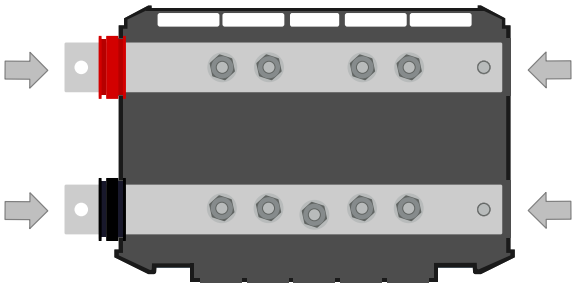

Lynx connections: The arrows indicate where the other Lynx modules can connect

The example below shows a Lynx system consisting of a Lynx Power In, Lynx Shunt VE.Can and Lynx Distributor. Together, they form a continuous busbar with unfused battery connections, battery monitor, main system fuse and fused load connections.

Figure 2. Example of Interconnected Lynx modules without their covers (Lynx Shunt VE.Can)

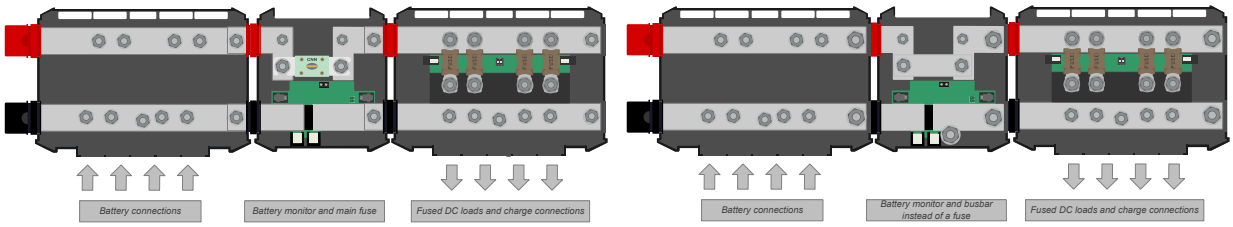

Interconnected Lynx modules: Lynx Power In, Lynx Shunt VE.Can and Lynx Distributor. On the right the Shunt with busbar instead of the fuse

The example below shows a Lynx system consisting of a Lynx distributor, Lynx Smart BMS and another Lynx Distributor. Together, they form a continuous busbar with fused battery and load connections, battery monitor, BMS system and contactor.

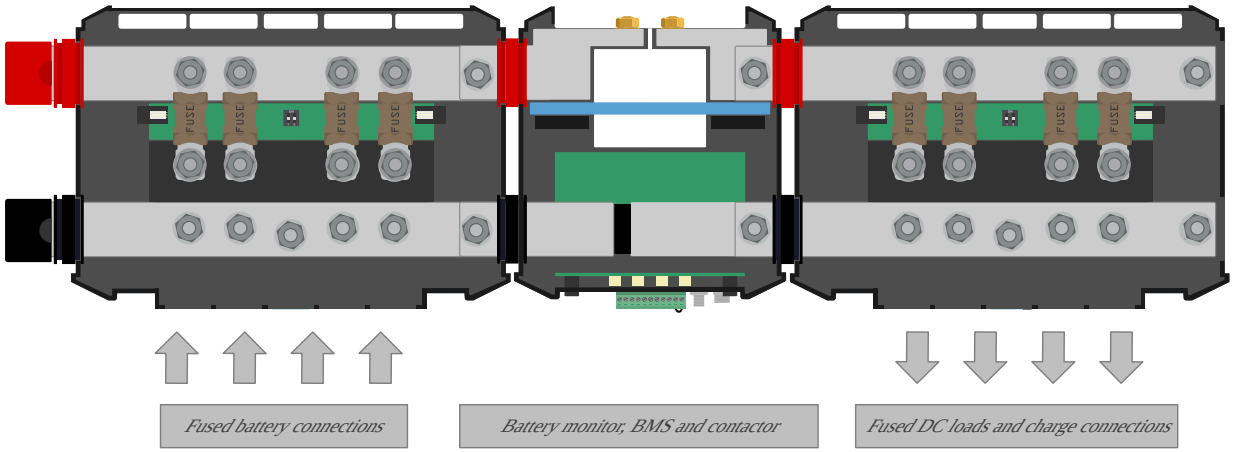

Interconnected Lynx modules: Lynx Distributor, Lynx Smart BMS and another Lynx Distributor

5.1.3. System example - Lynx Distributor only

In this system it does not matter which side the batteries, the DC loads or chargers are connected. Multiple Lynx Distributors and/or Lynx Power Ins can be used.

Note that the Lynx Distributor LEDs are not operational without a Lynx Shunt VE.Can or Lynx Smart BMS. However, it could be a design decision to use Lynx Distributor unpowered because there is a need for a fused busbar but not necessarily a need for broken fuse indication.

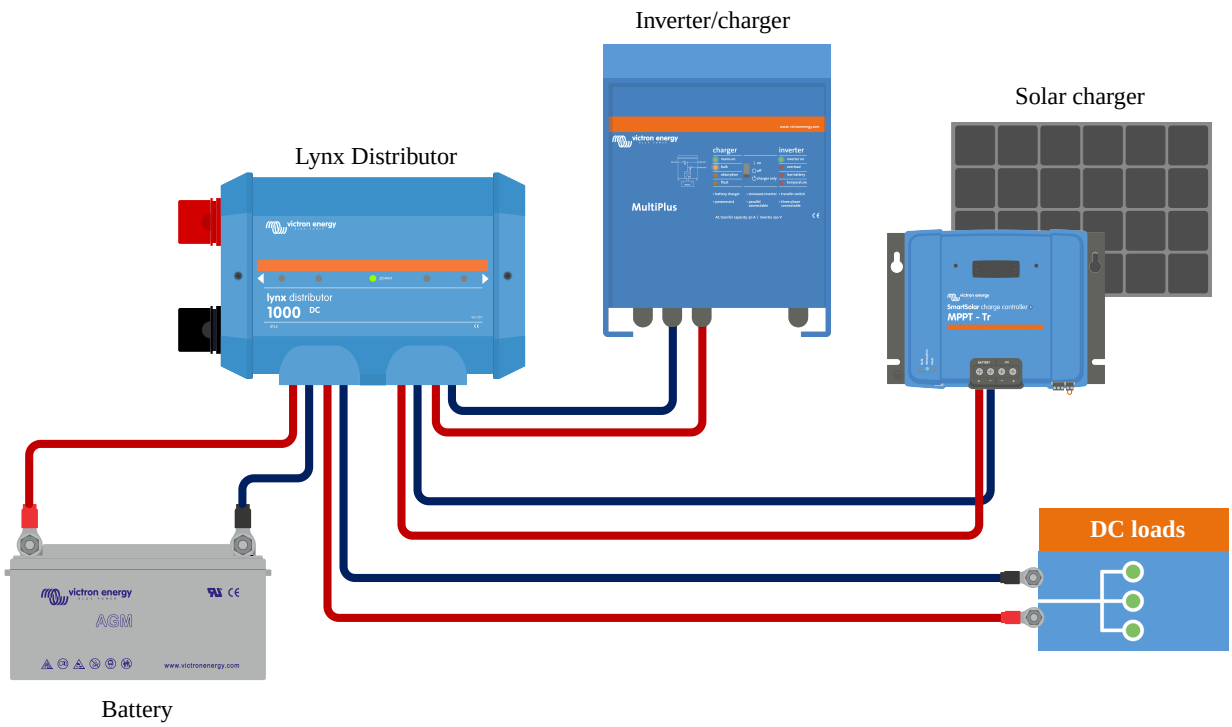

System with a Lynx Distributor only

5.1.4. System Example - Lynx Power In only

In this system a Lynx Power In is used by itself. Multiple Lynx Power In modules can be connected to each other thus creating a longer busbar with more connections for batteries and/or loads.

The Lynx Power In does not contain fuses. All connected loads, chargers or batteries need to be fused externally.

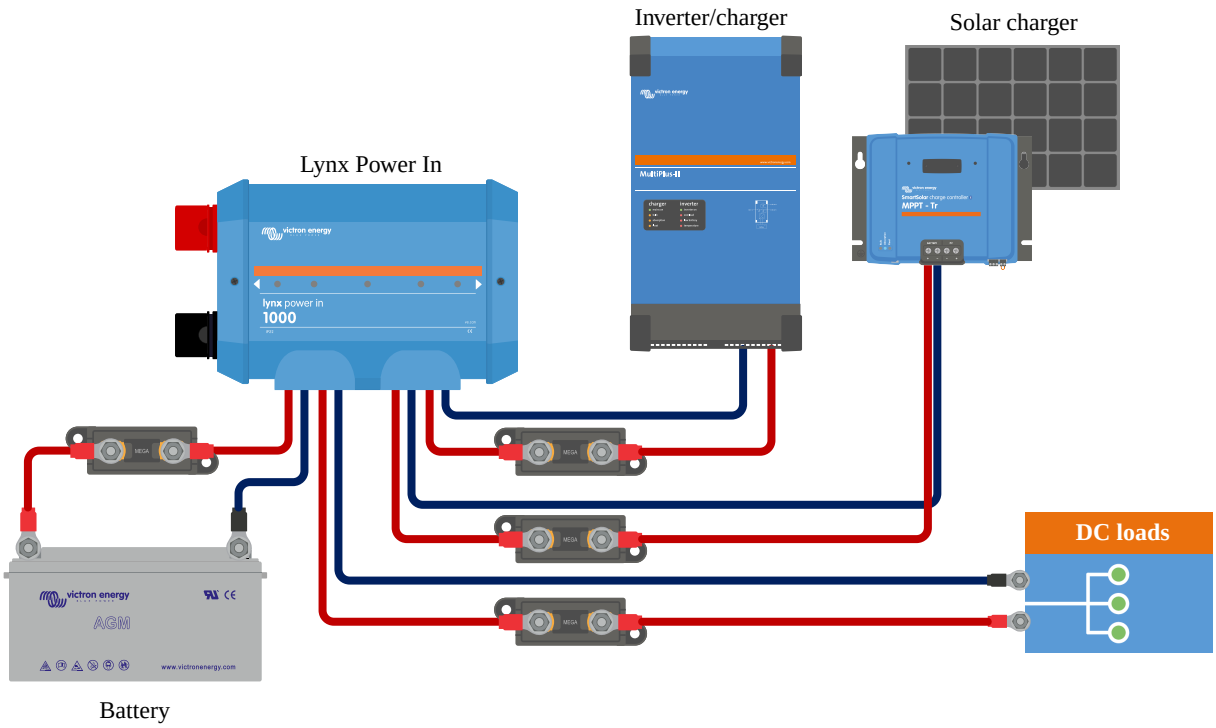

System with a Lynx Power In only

5.1.5. System Example - Lynx Class-T Power In and Lynx Distributor

This system uses a Lynx Class-T Power In to create a fused battery connection. A Lynx Distributor serves as a fused busbar for DC loads.

Multiple Lynx Class-T Power In modules can be connected together, creating a longer busbar with more battery connections.

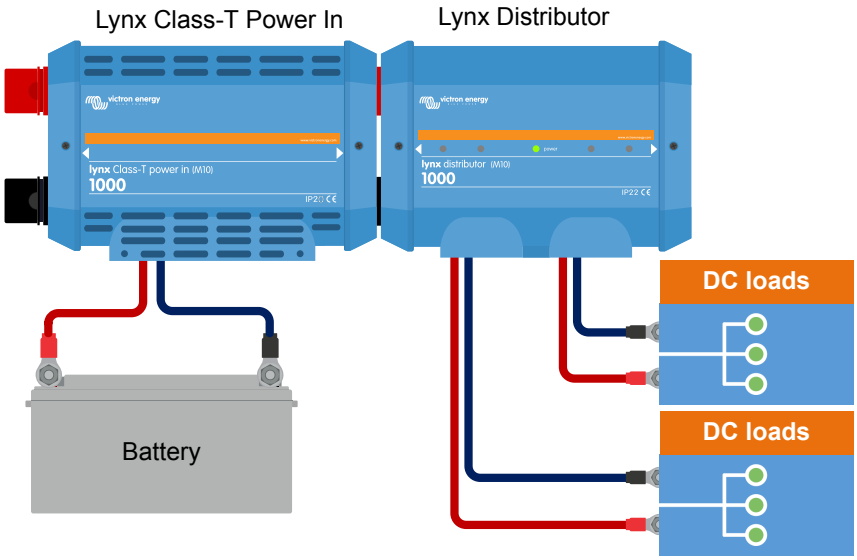

System with a Lynx Class-T Power In and Lynx Distributor

5.1.6. System example - Lynx Shunt VE.Can, Lynx Power In, Lynx Distributor and lead acid batteries

This system contains the following components:

- Lynx Power In with 4 paralleled 12V lead acid batteries.
- Identical cable lengths for each battery.
- Lynx Shunt VE.Can with main system fuse and battery monitor.
- Lynx Distributor with fused connections for inverter/charger(s), loads and chargers. Note that additional modules can be added if more connections are needed.
- Cerbo GX (or other GX device) to read out the battery monitor data.

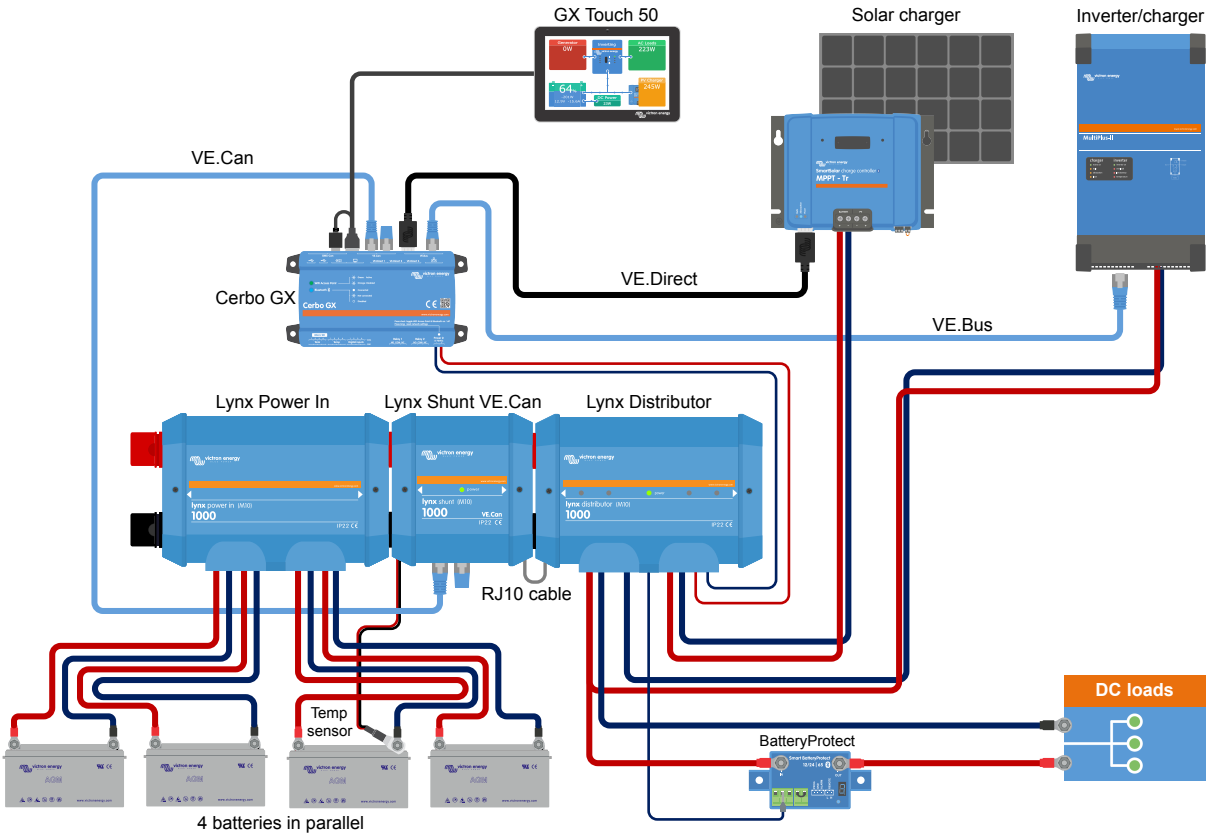

System with Lynx Shunt VE.Can, lead acid batteries and a Lynx Distributor

5.1.7. System example - Lynx Smart BMS, 1x Lynx Distributor and lithium batteries

It is possible to connect the lithium battery directly to the input of a Lynx Smart BMS. This is useful if only a single Lithium battery or a single series string of lithium batteries is used.

When connecting batteries directly to the output of the Lynx Smart BMS, make sure to fuse the incoming battery supply. Refer to the Lithium Smart Battery manual on how to fuse the battery bank.

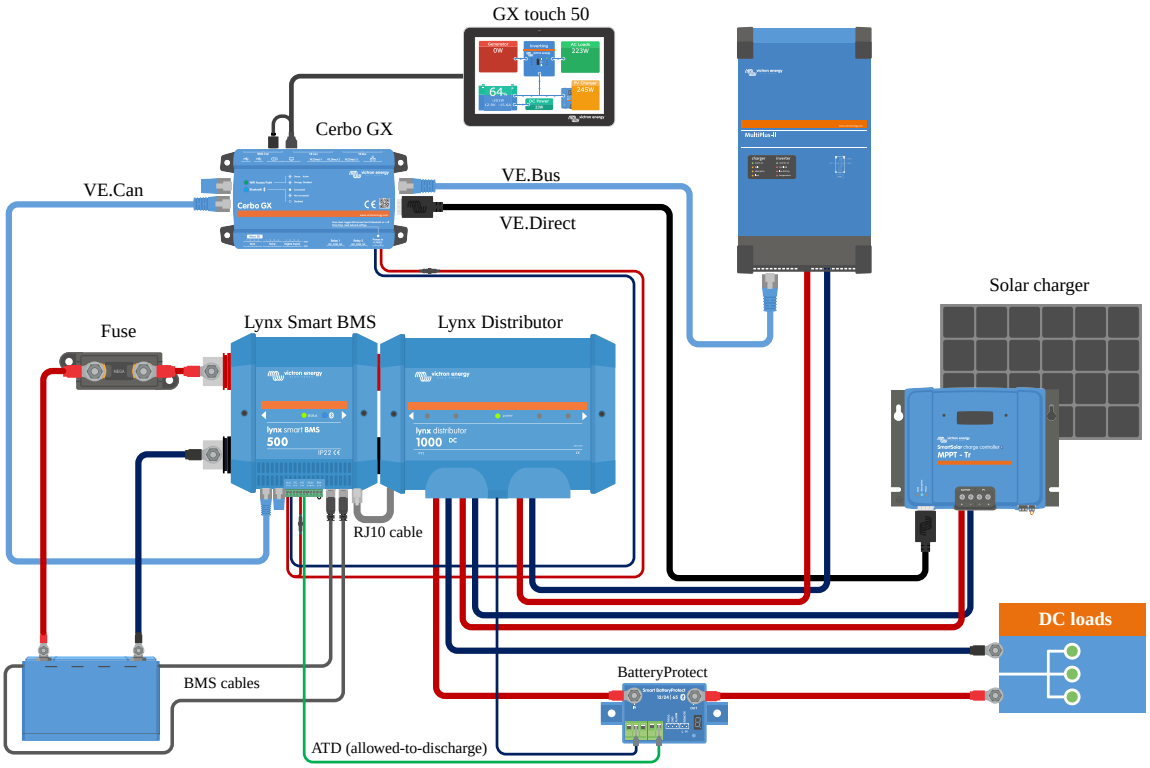

System with a Lynx Smart BMS and a Lynx Distributor

5.1.8. System example - Lynx Smart BMS, 2x Lynx Distributor and lithium batteries

This system contains the following components:

- Lynx Distributor with 2 fused paralleled Lithium Smart batteries with identical cable lengths for each battery (up to 5 paralleled series strings can be used per system).
- Lynx Smart BMS with BMS, contactor and battery monitor.
- Lynx Distributor provides fused connections for inverter/charger(s), loads and chargers. Additional modules can be added if more connections are needed.
- A Cerbo GX (or other GX device) to read out the Lynx Smart BMS and Lynx Distributor data.

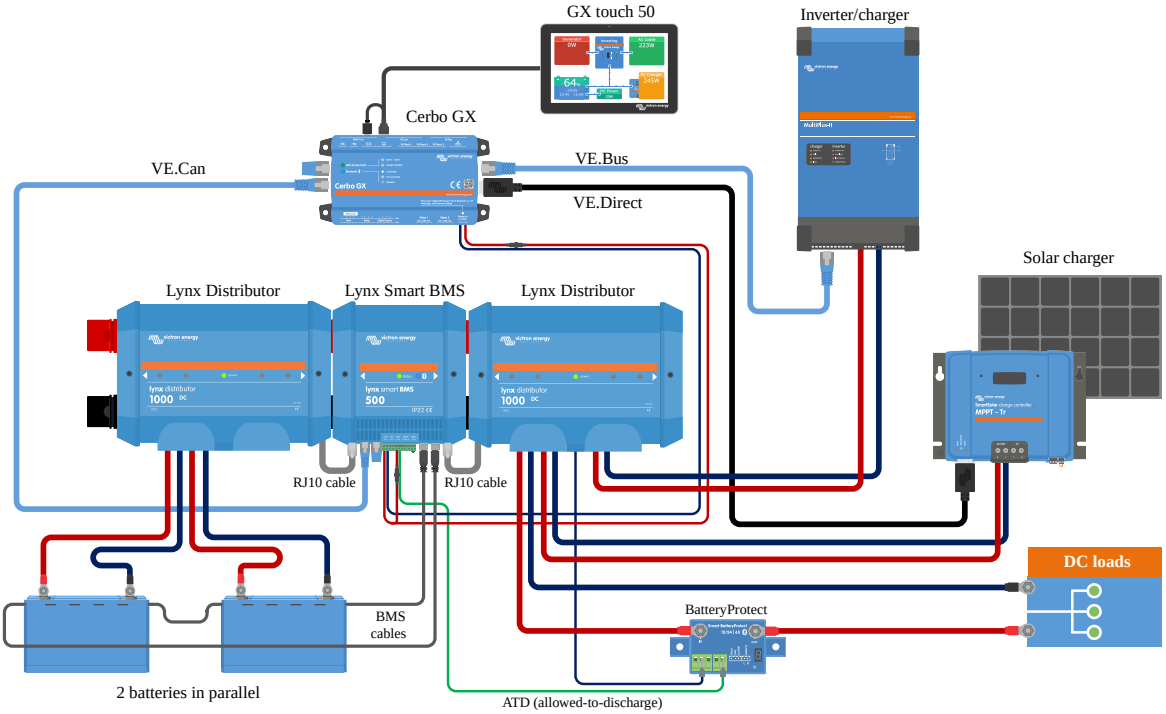

System with Lithium batteries, Lynx Smart BMS and two Lynx Distributors

5.2. System sizing

5.2.1. Current rating Lynx modules

The Lynx Distributor, Lynx Shunt VE.Can, Lynx Class-T Power In and the Lynx Power In are rated for a nominal current of 1000A for 12, 24 or 48 System voltages.

See the table below for an idea of how much power the Lynx modules are rated at different voltages. The power rating will indicate how big the connected inverter/charger system can be. Remember that if inverters or inverter/chargers are used, the batteries will power both the AC and DC systems. Also, be aware that a Lynx Smart BMS or a Lynx Ion (now discontinued) can have a lower current rating.

	12V	24V	48V
1000A	12kW	24kW	48kW

5.2.2. Fusing

The Lynx Distributor has spaces for 4 fuses, one for each DC circuit. These spaces have been designed to fit MEGA fuses. For 12V and 24V systems use 36V-rated MEGA fuses and for 48V systems use 58V-rated MEGA fuses. For more information, see the Fuses & Fuse holders product page.

Always use fuses with the correct voltage and current rating. Match the fuse rating to the maximum voltages and currents that potentially can occur in the fused circuit. For more information on fuse ratings and fuse current calculations see the Wiring Unlimited book.

> ⚠ The total value of the fuses of all circuits should not be more than the current rating of the Lynx module or the Lynx model with the lowest current rating in case of multiple Lynx modules are used.

5.2.3. Cabling

The current rating of the wires or cables used to connect the Lynx Distributor to batteries and/or the DC loads, has to be rated for the maximum currents that can occur in the connected circuits. Use cabling with a sufficient core surface area to match the maximum current rating of the circuit.

For more information on cabling and cable thickness calculations, see our book, Wiring Unlimited.

6. Installation

6.1. Mechanical connections

6.1.1. Lynx module connection features

The Lynx module can be opened up by unscrewing the 2 cover screws.

The contacts on the left side are covered by a removable rubber sleeve.

Red is the positive and black is the negative busbar.

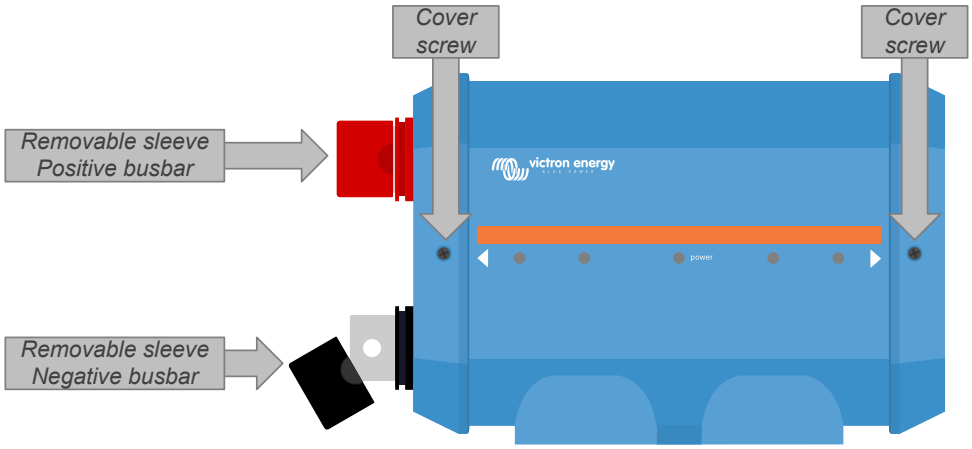

Location of front cover screws and the removable sleeves

6.1.2. Mounting and interconnecting Lynx modules

This paragraph explains how to attach several Lynx modules to each other and how to mount the Lynx assembly into its final location.

For a mechanical drawing of the housing with dimensions and the location of the mounting holes, see the Enclosure Dimensions of this manual.

These are the points to take into consideration when interconnecting and mounting Lynx modules:

- If Lynx modules are going to be connected to the right and if the Lynx module is fitted with a plastic barrier on the right side, remove the black plastic barrier. If the Lynx module is located as the most right module, leave the black plastic barrier in place.
- If Lynx modules are going to be connected to the left, remove the red and black rubber sleeves. If the Lynx module is located as the most left module, leave the red and black rubber sleeves in place.
- If the Lynx system contains a Lynx Smart BMS or Lynx Shunt VE.Can, the left side is the battery and the right side is the DC system side.
- Connect all Lynx modules to each other using the M10 holes and bolts on the left and right. Take care that the modules are correctly slotted into the rubber joiner recesses.
- Place the washer, spring washer and nut on the bolts and tighten the bolts using a torque of:

  M10 Model: 33Nm (17Nm for units with a serial number before HQ2340XXXX)
- Mount the Lynx assembly in its final location using the 5mm mounting holes.

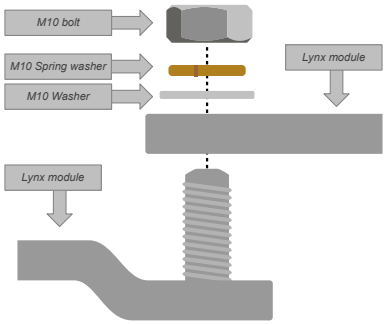

Correct placement of the M10 washer, spring washer and nut.

6.1.3. Addressing Lynx Distributor

These instructions only apply if the system contains a Lynx Smart BMS together with multiple Lynx Distributors and the serial number of the Lynx Distributors is HQ1909 or above.

· Name the Lynx Distributors from left to right: A, B, C, and D. Do this so that the fuse alarms correspond with the Lynx Distributor names.

Figure 3. Example of Lynx Distributor configuration and labelling

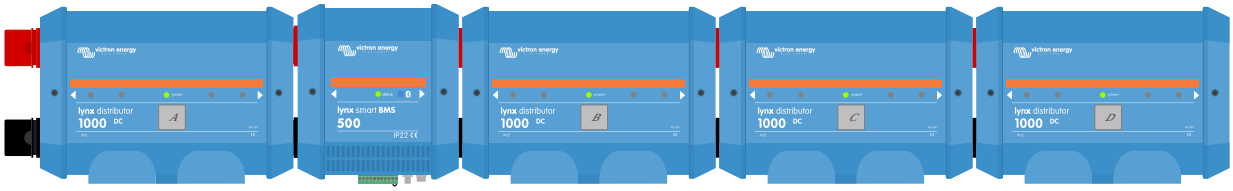

Set the 2-way DIP switch in each Lynx Distributor to correspond with its name. Up to 4 Lynx Distributors can be programmed this way. See the table below for how to set the DIP switches for each unit. By default, both DIP switches are set to off (A).

Figure 4. Location of the Lynx Distributor 2-way DIP switch

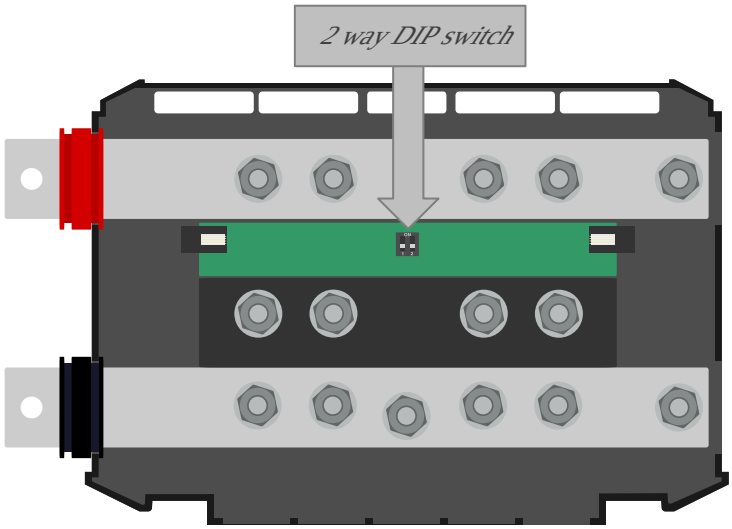

Table 1. Lynx Distributor DIP switch programming table

Distributor name	Switch 1	Switch 2	Configuration
A	Off	Off	
B	On	Off	
C	Off	On	
D	On	On	

6.2. Electrical connections

6.2.1. Connect RJ10 cable(s)

These instructions only apply if the system contains Lynx distributor(s) together with a Lynx Smart BMS or a Lynx Shunt VE.Can.

There are two RJ10 connectors in each Lynx Distributor, one on the left and one on the right. See the drawing below.

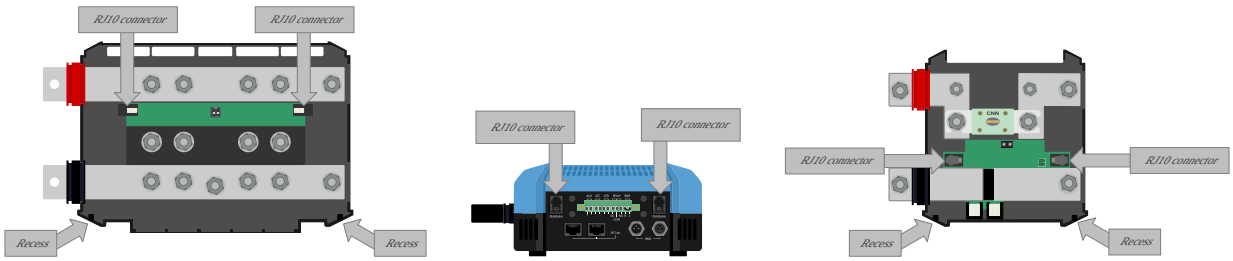

Locations of the RJ10 connectors and RJ10 cable recesses on the Lynx Distributor and the Lynx Smart BMS

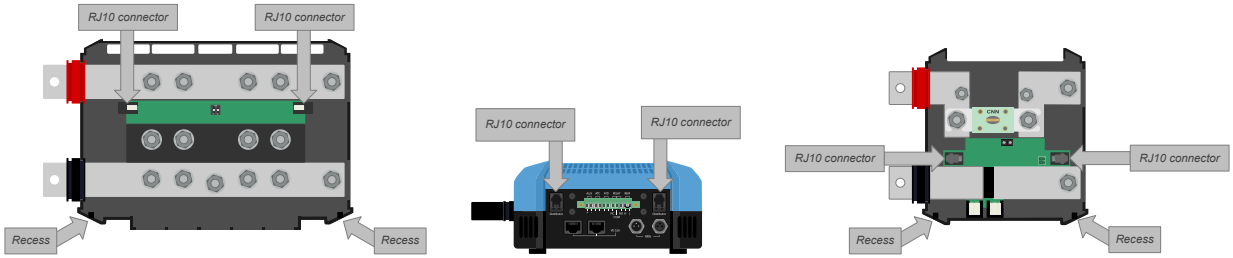

Locations of the RJ10 connectors and RJ10 cable recesses on the Lynx Distributor and the Lynx Shunt VE.Can

To connect the RJ10 cables between the various Lynx modules, do the following:

- Plug one side of the RJ10 cable in the RJ10 connector of the Lynx Distributor with the retainer clip of the RJ10 connector facing away from you.
- Feed the RJ10 cable through the recess at the bottom of the Lynx Distributor; see the above picture.
- To connect to another Lynx Distributor, feed the cable through its bottom recess and plug the RJ10 cable into the RJ10 connector.
- To connect to a Lynx Shunt VE.Can, feed the cable through its bottom recess and plug the RJ10 cable into the RJ10 connector.
- To connect to a Lynx Smart BMS, plug the RJ10 cable into the RJ10 connector at the bottom of the Lynx Smart BMS.

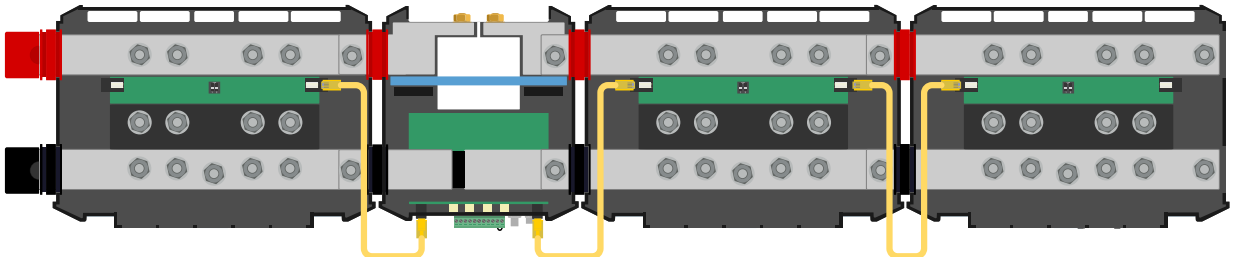

Connection example Lynx Smart BMS system - RJ10 cables indicated in yellow

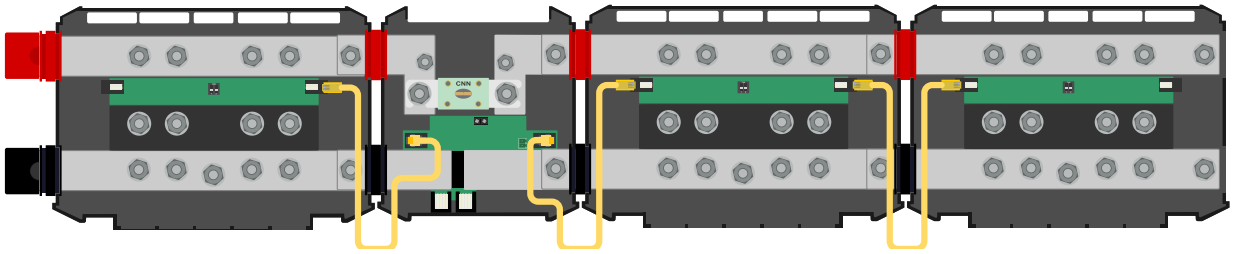

Connection example Lynx Shunt VE.Can system - RJ10 cables indicated in yellow

6.2.2. Connect DC wires

This chapter might not apply if the Lynx module is connected to other Lynx modules like this can be the case for the Lynx Smart BMS or the Lynx Shunt VE.Can.

For all DC connections, the following applies:

- All cables and wires connected to the Lynx module need to have been fitted with M10 cable lugs.
- Pay attention to the correct placement of the cable lug, washer, spring washer and nut on each bolt when attaching the cable to the bolt.
- Tighten the nuts using a torque of:

  M10 Model: M10 nuts: 33Nm (17Nm for units with a serial number before HQ2340XXXX) - M8 nuts: 14Nm

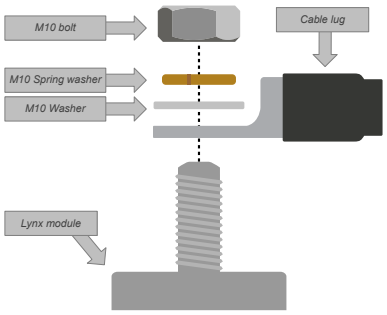

Correct placement of the M10 Cable lug, washer, spring washer and nut

6.2.3. Ground and Negative connections

Connect the ground wire

This only applies if the system requires a ground connection. There should only be one ground connection per system. The ground connection should be made after the Lynx Smart BMS, Lynx Shunt VE.Can or battery monitor shunt. For more information on system grounding, see the Wiring Unlimited book.

The ground connection of the Lynx Distributor has a wire with a red cable lug already connected to it. Leave this wire in place when connecting the ground wire.

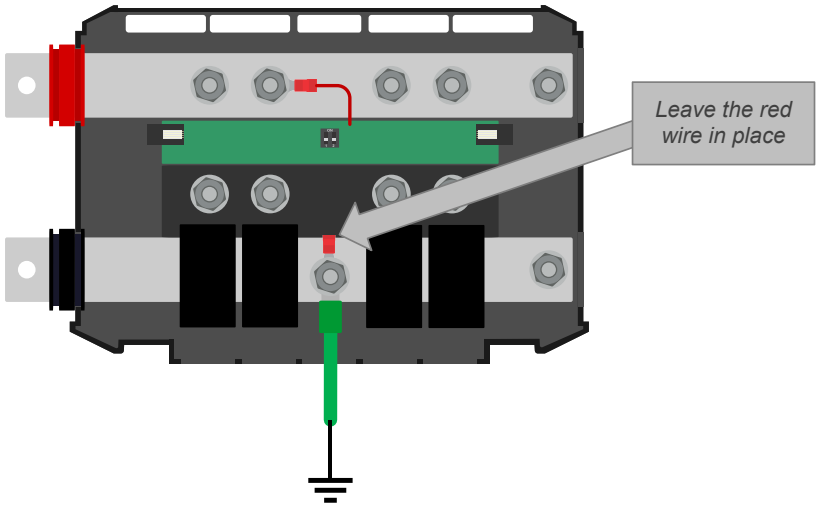

Ground connection Lynx Distributor

Connect the negative wires

Remove the cable separator post if the wire diameter exceeds 10mm.

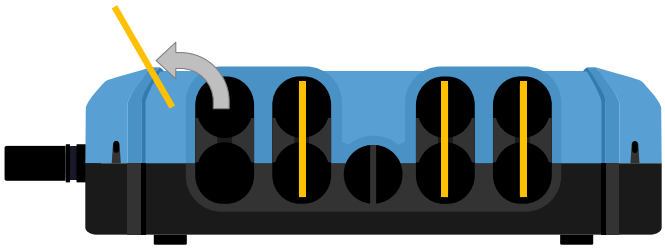

The cable separator posts are indicated in yellow

To reach the negative connections, swing the black cable separators upwards. The black cable separators can be temporarily removed by pulling them away from the Lynx Distributor at a slight sideways angle in case better access is needed.

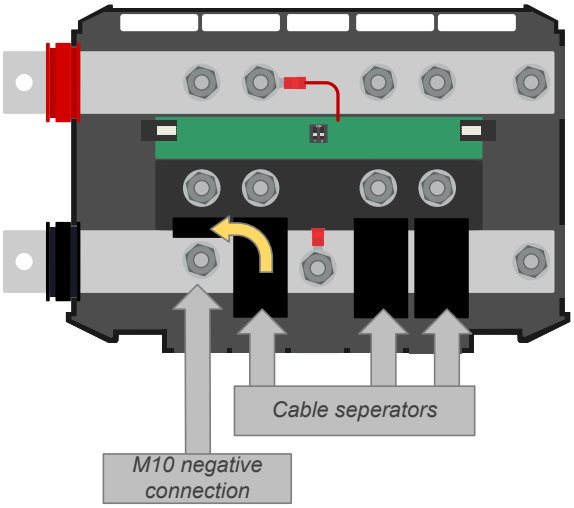

Flip up the cable separator to reach the negative connections

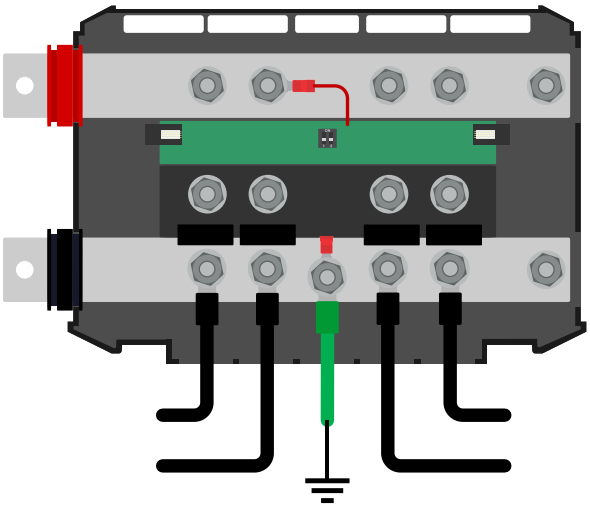

Negative connection Lynx Distributor

6.2.4. Place Lynx Distributor fuses

Before placing fuses, check if the middle row's bottom nuts are tightened correctly to a use torque moment of 10Nm.

Place all 4 fuses, even if not all 4 circuits are used. Placing dummy fuses in the unused circuits will prevent the red warning LED from illuminating.

The second fuse connection has a wire with a cable lug that is already connected to it. Lift the red cable lug, place the fuse against the busbar and replace the red cable lug.

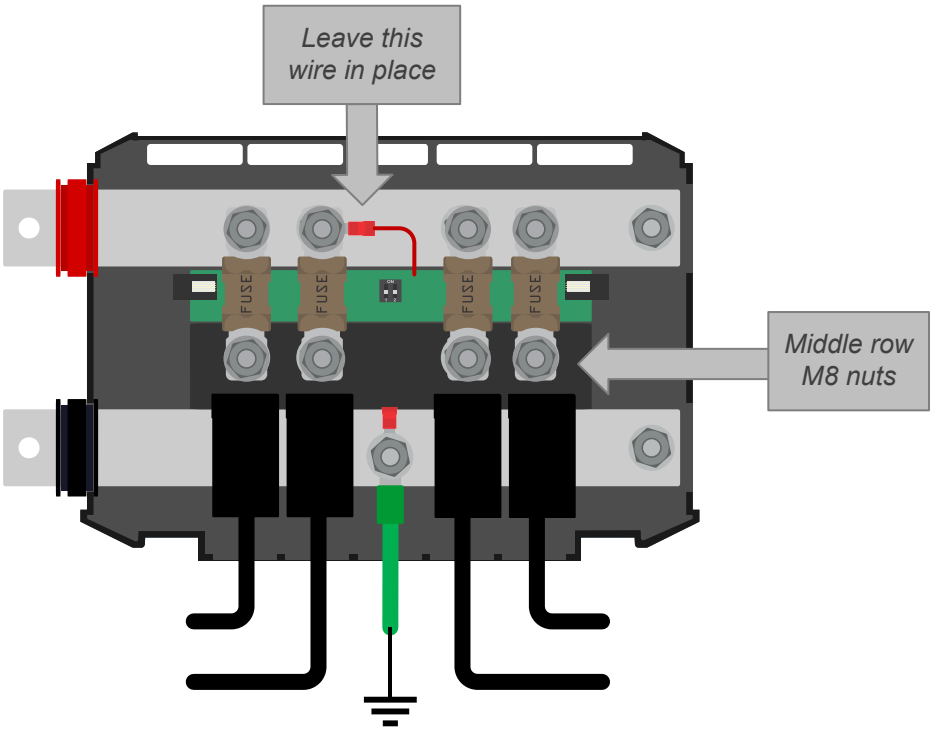

Placing Lynx Distributor fuses

6.2.5. Positive connections

> ⚠ Before making any positive connections, ensure the positive wires are not powered. Disconnect all positive cables from the battery before connecting them to the Lynx module. This to prevent accidental short circuits.

Connect all positive wires.

Power the Lynx system by connecting the positive battery pole(s).

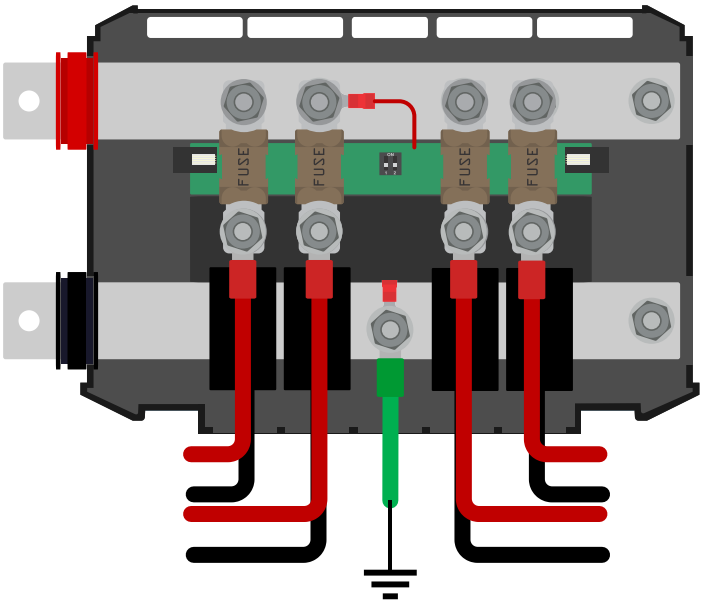

Connecting the positive wires Lynx Distributor

6.3. Configuration and settings

6.3.1. Settings Lynx Distributor

These instructions only apply if the system contains one or more Lynx Distributors.

Each Lynx distributor must be addressed and set to A, B, C or D. This is done via a 2-way dip switch inside the Lynx distributor. Refer to section 6.1.3. Addressing Lynx Distributor [19] in the Lynx distributor manual.

Use the VictronConnect App to give each fuse a custom name (maximum 16 characters). If the fuse name is empty (0 characters), the fuse will be disabled from monitoring and be ignored.

- Navigate to the settings page by clicking the gear symbol at the top right-hand corner.
- On the settings page, scroll down to the Lynx Distributor settings.
- Click on a fuse name; a window opens to rename the fuse.

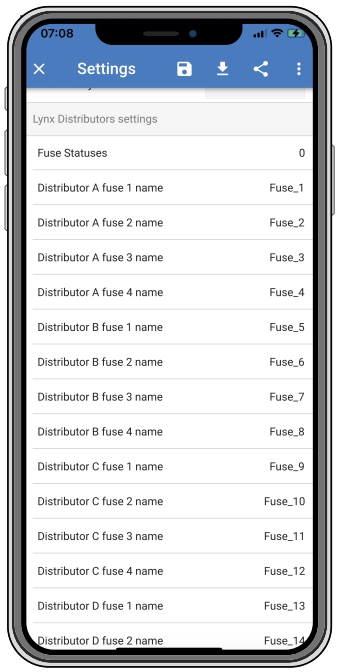

Setting the Lynx Distributor fuse names using VictronConnect

7. Commissioning the Lynx Distributor

Commissioning sequence:

- [ ] Check polarity of all DC cables. Check cross sectional area of all DC cables.
- [ ] Check if all cable lugs have been crimped correctly.
- [ ] Check if all cable connections are tight (don’t exceed maximum torque).
- [ ] Tug slightly on each battery cable to check if the connections are tight and if the cable lugs have been crimped correctly.
- [ ] Check if the fuses have been placed and their connections are tight (don’t exceed maximum torque).
- [ ] Check if the fuse names of the Lynx Distributor (if applicable) are correctly named

8. Operation Lynx Distributor

Powering up

When the Lynx Distributor is powered up by the Lynx Smart BMS, all LEDs will light up for one second, after which the address briefly is shown via a fuse LED. Fuse 1 LED illuminates for Distributor A, Fuse 2 LED illuminates for Distributor B and so on. The power LED is orange during power up and will turn green once power up is complete.

> Older Lynx Distributors with a serial number below HQ1909 will only show all LEDs light up for one second during power-up.

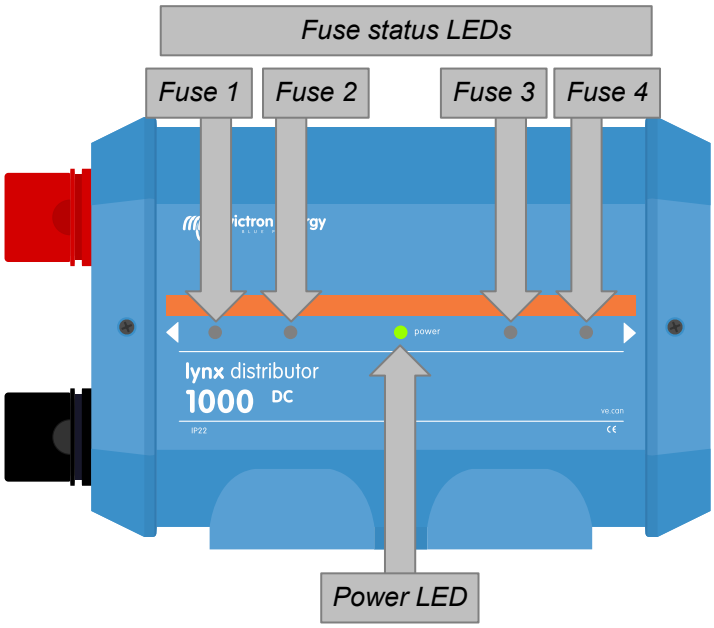

LED locations and their names

Normal operation

During normal operation the power LED is green, and all fuse LEDs are off. This means everything is all right, the bus is powered, and all fuses are okay.

Alarm operation

When a fuse blows (or is missing) the power LED turns red and the fuse LED of the affected fuse turns red.

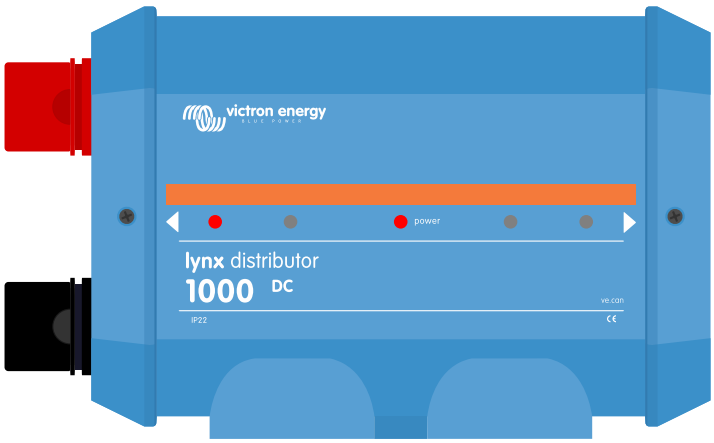

LED indication blown fuse Lynx Distributor

When the busbar is not powered, the power LED turns yellow. This can occur, for example, when the main fuse in the Lynx Shunt VE.Can has blown, and all downstream Lynx Distributors therefore have unpowered busbars.

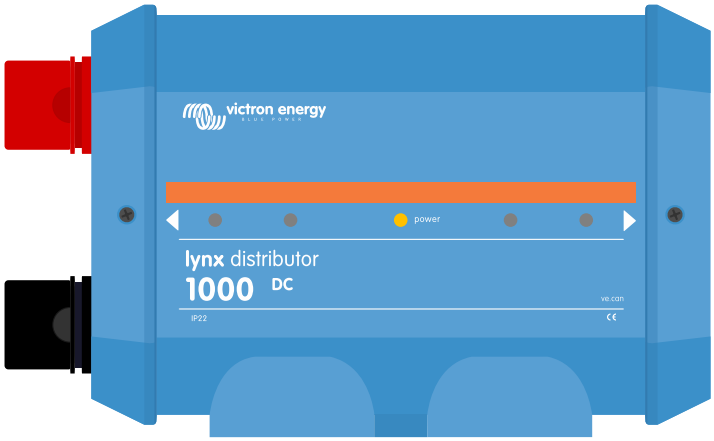

LED indication busbar unpowered

LED overview

The operational status of the Lynx Distributor is communicated via LEDs. This is the overview:

Table 2. Lynx Distributor LED overview

LED indication	Status
Power LED yellow + fuse LEDs off	No voltage supplied to the positive bus bar
Power LED green + fuse LEDs off	Positive bus bar is powered, and all fuses are ok
Power LED red + fuse led(s) red	One or more fuses are blown
All LEDs light up for one second	Powering up

8.1. Monitoring Lynx Distributor

This paragraph only applies if the Lynx Distributor is connected to a Lynx Smart BMS.

The VictronConnect app

The Lynx Distributor information can be viewed with the VictronConnect App via the Lynx Smart BMS.

In the VictronConnect App, click on the “DISTRIB.” tab to see the Lynx Distributor status window.

All connected Distributors and their fuse status will be displayed here.

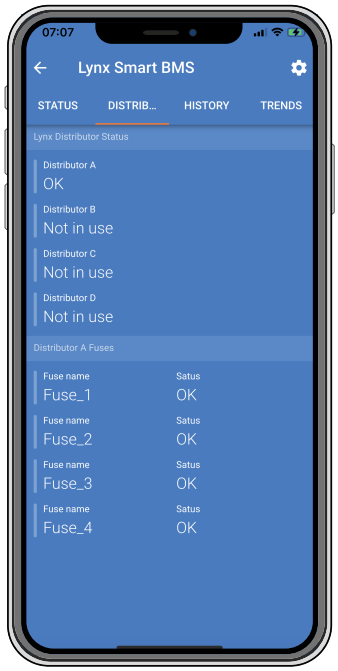

The VictronConnect App Lynx Smart BMS showing Lynx Distributor status

Fuse blown alarm

This alarm is raised if a fuse has blown. The fuse status will change in the VictronConnect App and an alarm message is displayed. The alarm message will also be shown on a connected GX device and the VRM portal. The fuses are numbered from left to right.

NOTE: These alarm codes are a workaround until the Lynx Smart BMS is supported in VenusOS. The alarm message on the GX device or the VRM portal will be similar to the message shown in the VictronConnect App.

Table 3. Lynx Distributor fuse blown alarm codes

Alarm	Description
#201	Distributor A, Fuse 1 blown
#202	Distributor A, Fuse 2 blown
#203	Distributor A, Fuse 3 blown
#204	Distributor A, Fuse 4 blown
#205	Distributor B, Fuse 1 blown
#206	Distributor B, Fuse 2 blown
#207	Distributor B, Fuse 3 blown
#208	Distributor B, Fuse 4 blown
#209	Distributor C, Fuse 1 blown
#210	Distributor C, Fuse 2 blown
#211	Distributor C, Fuse 3 blown
#212	Distributor C, Fuse 4 blown
#213	Distributor D, Fuse 1 blown
#214	Distributor D, Fuse 2 blown
#215	Distributor D, Fuse 3 blown
#216	Distributor D, Fuse 4 blown

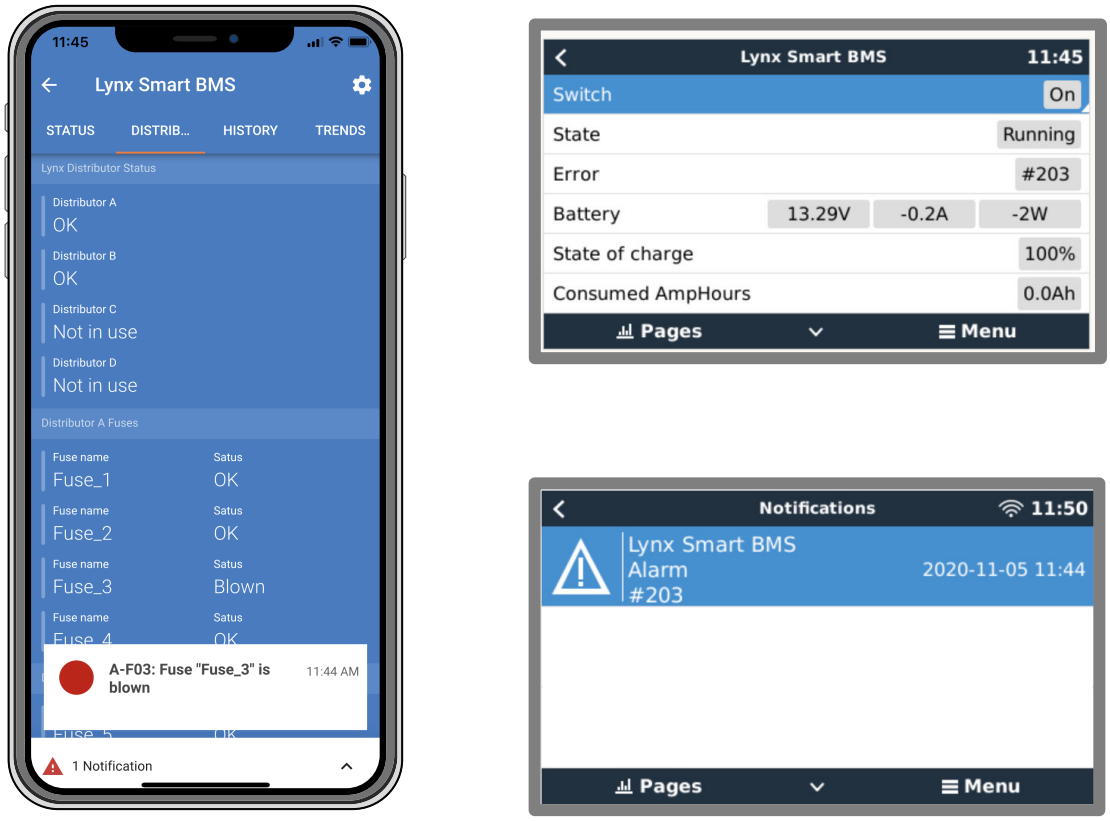

Examples of a fuse alarm on the VictronConnect App and on a GX device

Communication lost alarm

This alarm is raised, if a Lynx Distributor was detected by the Lynx Smart BMS on power up but the Lynx Smart BMS cannot see the Lynx Distributor any longer.

The Distributor status will change from OK to “communication lost” in the VictronConnect App and an alarm message is displayed. The alarm message will also be shown on a connected GX device and the VRM portal.

NOTE: These alarm codes are a workaround until the Lynx Smart BMS is supported in VenusOS. The alarm message on the GX device or the VRM portal will be similar to the message shown in the VictronConnect App.

Table 4. Lynx Distributor lost alarm codes

Alarm	Description
#221	Distributor A, communication lost
#222	Distributor B, communication lost
#223	Distributor C, communication lost
#224	Distributor D, communication lost

9. Troubleshooting and Support

For unexpected behaviour or suspected product faults, refer to this chapter.

Start by checking the common issues described here. If the problem persists, contact the point of purchase (Victron dealer or distributor) for technical support.

If you're unsure who to contact or if the point of purchase is unknown, refer to the Victron Energy Support webpage.

9.1. Cabling issues

Cables heat up

This can be caused by a wiring or connection issue. Check the following:

- Check if all cable connections are tightened with a torque moment of 17Nm.
- Check if all fuse connections are tightened with a torque moment of 17Nm.
- Check if the surface area of the cable core is large enough for the current through that cable.
- Check if all cable lugs have been crimped correctly and are tight enough.

Other cabling issues

For additional information about issues that can arise from bad or incorrect cabling, cable connections or wiring of battery banks refer to the Wiring Unlimited Book.

9.2. Fuse issues

For additional information about issues that can arise from incorrect fuse ratings or types refer to the Wiring Unlimited Book.

Red fuse LED on

This is caused by a blown or missing fuse. It can also be caused by a malfunctioning fuse or if the fuse connections are loose. The Lynx Distributor measures the voltage over each fuse. As soon as it is more than 0.5V the fuse is marked as blown and if the voltage is less than 0.3V it is marked as ok.

- In case of a blown or malfunctioning fuse – replace the fuse.
- In case of a missing fuse because the circuit is unused - place a dummy fuse in the unused fuse space.
- In case of a loose connection - check if both fuse connections have been tightened with a torque moment of 14Nm.

Red fuse LED intermittently on

This is most likely caused by a loose fuse or a bad fuse. Refer to the previous paragraph.

Fuse is missing in the VictronConnect list

Check the fuse name with the VictronConnect App. When the fuse name field is empty, the fuse will be disabled from monitoring and ignored.

Fuse blows as soon as a new fuse is installed

Check the DC circuit that is attached to the fuse for the following:

- Check if there is a short circuit.
- Check if there is a malfunctioning load.
- Check if the current in the circuit is not larger than the fuse rating.

Blown battery fuse not being detected straight away

When batteries are connected to multiple Lynx Distributor circuits and if one of the battery fuses blows, the fuse monitor will not measure a high enough voltage over the fuse to trigger a broken fuse alarm, until the battery is being charged or discharged.

Blown battery fuse not being detected

The fuse monitors in Lynx Distributor modules with older firmware (pre HQ1909) cannot detect a blown fuse when batteries are connected to multiple Lynx Distributor circuits.

9.3. Lynx Distributor operational issues

Does not power up (No LEDs)

The electronics that drive the fuse detection circuits and the Lynx Distributor receives its power from a Lynx Smart BMS or from a Lynx VE.Can via the RJ10 cable. When correctly powered up, the power LED should illuminate either green yellow or red. If no LEDs are illuminated at all check the following:

- Check if the RJ10 cable is connected and if there is a Lynx Shunt VE.Can or a Lynx Smart BMS in the system.
- In case of a Lynx Smart BMS it could also be that the Lynx Smart BMS has depowered the Lynx Distributor because of an empty battery or the Lynx Smart BMS remote on/off switch has been switched to off. For more information see the Lynx Smart BMS manual.

Yellow power LED

This happens when there is no voltage supplied to the positive busbar, but the Lynx Distributor is still receiving power via the RJ10 cable. A common cause is when the main fuse in the Lynx Shunt VE.Can or an external main fuse has blown.

Unable to communicate

Communication with the Lynx Distributor is only possible together with a Lynx Smart BMS. Connect with the VictronConnect App to the Lynx Smart BMS and check if the Lynx Distributor shows up on the app. Check the serial number of all Lynx Distributors, it needs to be HQ1909 and above for it to be able to communicate.

- Check if all Lynx Distributors are powered; the power LED needs to be on.
- Check the integrity of all RJ10 cables and check if they are all correctly plugged in.
- Check how many Lynx Distributors are used. It is not possible to communicate with more than 4 Lynx Distributors at the same time.
- Check the addressing of each Lynx Distributor and check if all the DIP switches have been set correctly. Each of the 4 Lynx Distributors will need a unique address. If multiple Lynx Distributors have the same address, only one will appear. The others with the same address will be missing.

Lynx Distributor names not sequential

An addressing mistake has been made when setting the DIP switches.

The VictronConnect App “DISTRIB” list shows Distributor not in use

This can be because the Lynx Smart BMS has turned the Lynx Distributor off or the Lynx Distributor is not connected with the RJ10 cable.

Communication lost

This alarm is raised if a Lynx Distributor is detected by the Lynx Smart BMS on power up but cannot see the Lynx Distributor anymore. The Lynx Smart BMS sends a message to all Lynx Distributors every 250ms and if the Lynx Distributor does not answer the communication lost alarm is raised. The most likely cause of this alarm is that the RJ10 cable has been disconnected.

10. Technical specifications Lynx Distributor

Power	
Voltage range	9 - 60Vdc
Supported system voltages	12, 24 or 48V
Reverse polarity protection	Yes (1)
Current rating	1000Adc continuous
Power consumption (2)	Maximum 100mA (with all LEDs illuminated)
(1) The RJ10 cable connection is not protected against reverse polarity (2) Powered from Lynx Shunt VE.Can or Lynx Smart BMS	

Connections	
Busbar	M10
Fuses	M8
Power(3) and data(4)	40 cm RJ10 cable (included)
(3) Powered from Lynx Shunt VE.Can or Lynx Smart BMS (4) Data can only be received by a Lynx Smart BMS	

Physical	
Enclosure material	ABS
Enclosure dimensions (hxlxw)	290 x 170 x 80 mm
Unit weight	2.2 kg
Busbar material	Tinned copper
Busbar material (hxw)	8 x 30mm

Environmental	
Operating temperature range	-40°C to +60°
Storage temperature range	-40°C to +60°
Humidity	Max. 95% (non-condensing)
Protection class	IP22
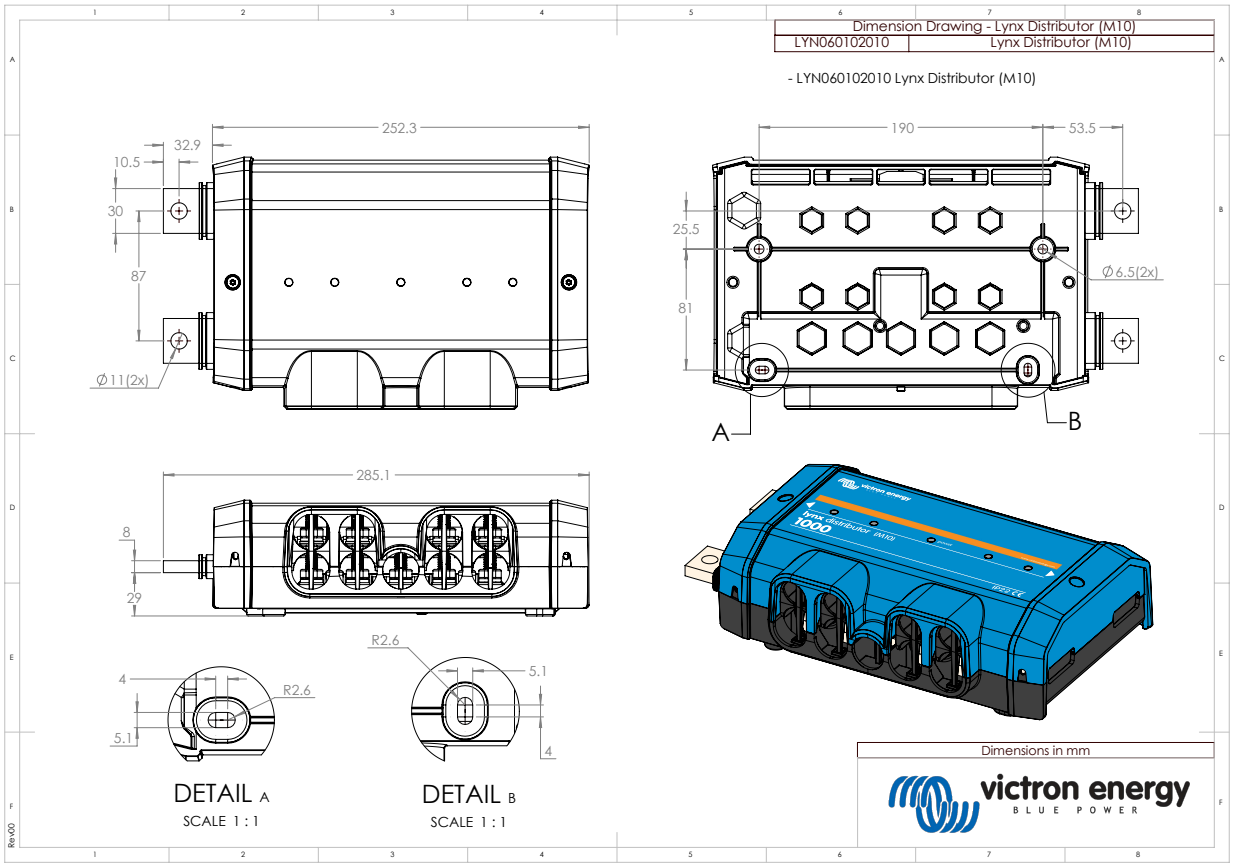
11. Enclosure dimensions Lynx Distributor M8 and M10